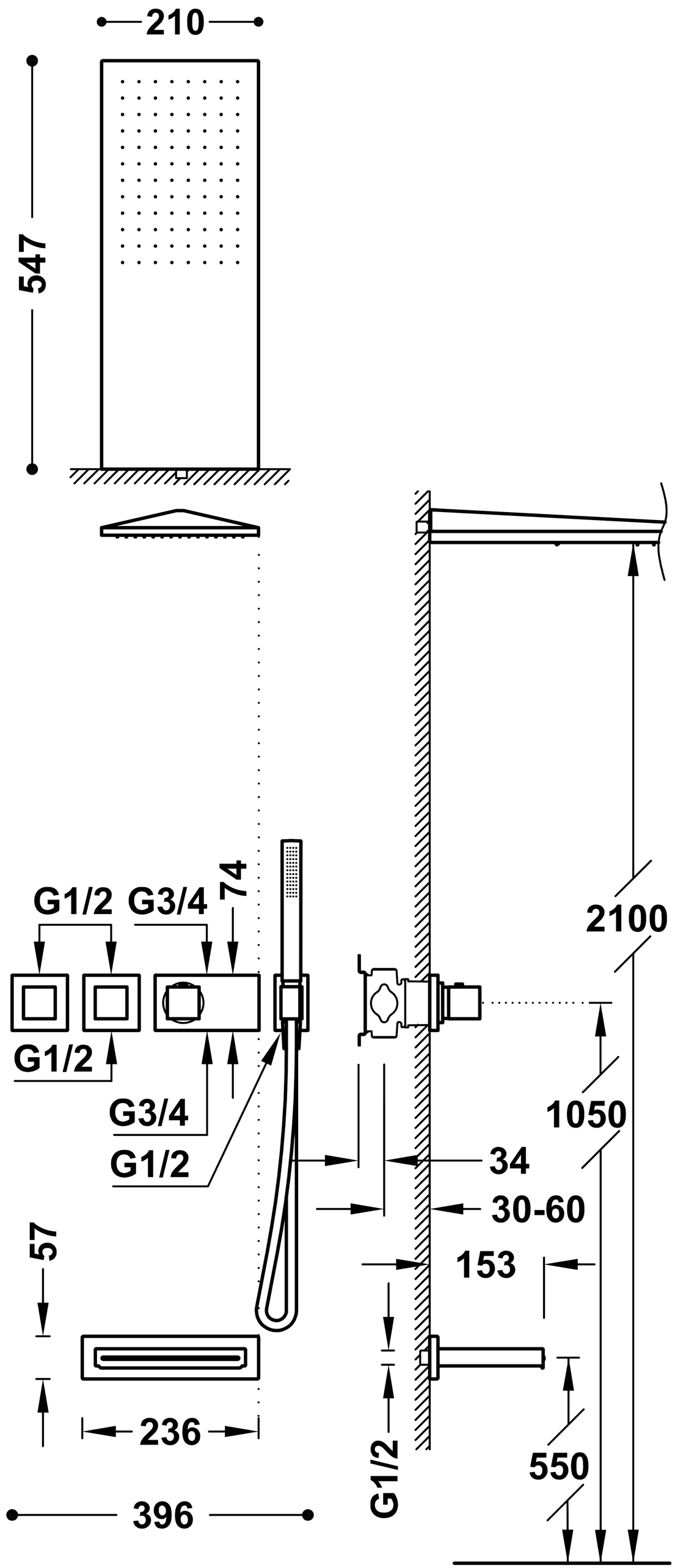
210
547
G1/2
G3/4
74
G1/2
G3/4
G1/2
2100
1050
34
30-60
153
57
236
G1/2
550
396