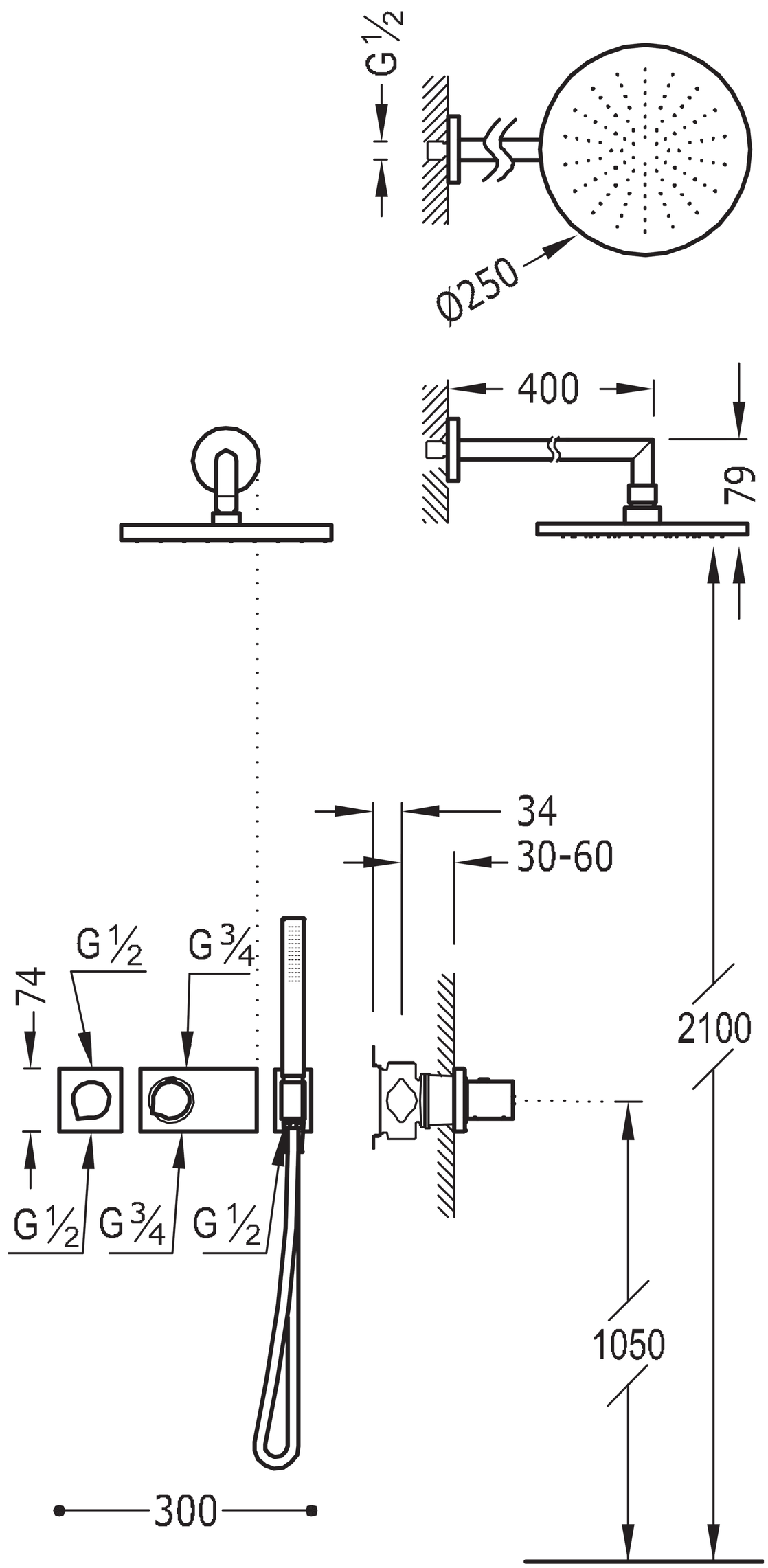
G½
Ø250
400
79
34
30-60
2100
G½
G¾
74
G½
G¾
G½
1050
300