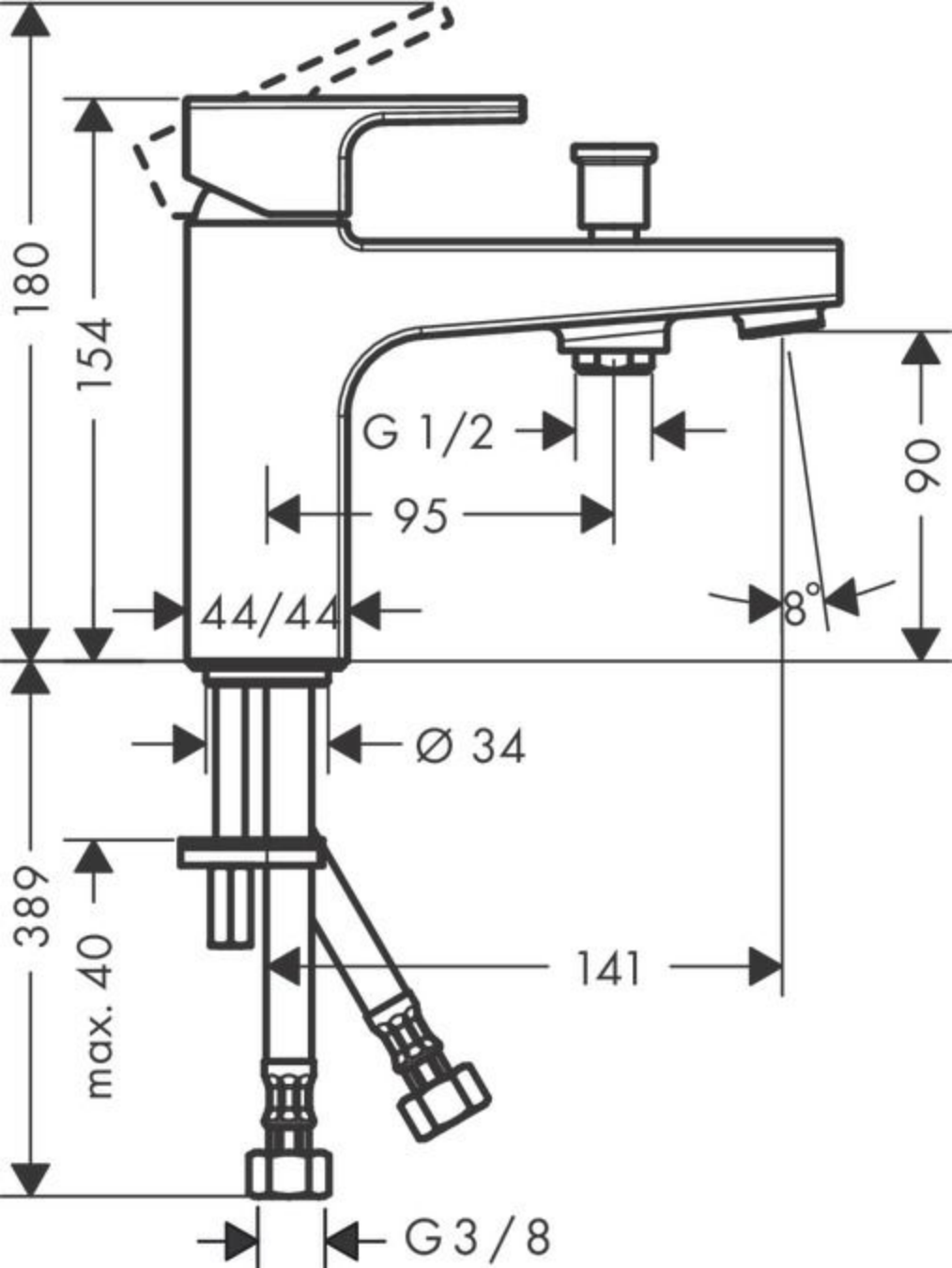
180
154
G 1/2
95
90
44/44
8°
Ø 34
389
max. 40
141
G3/8