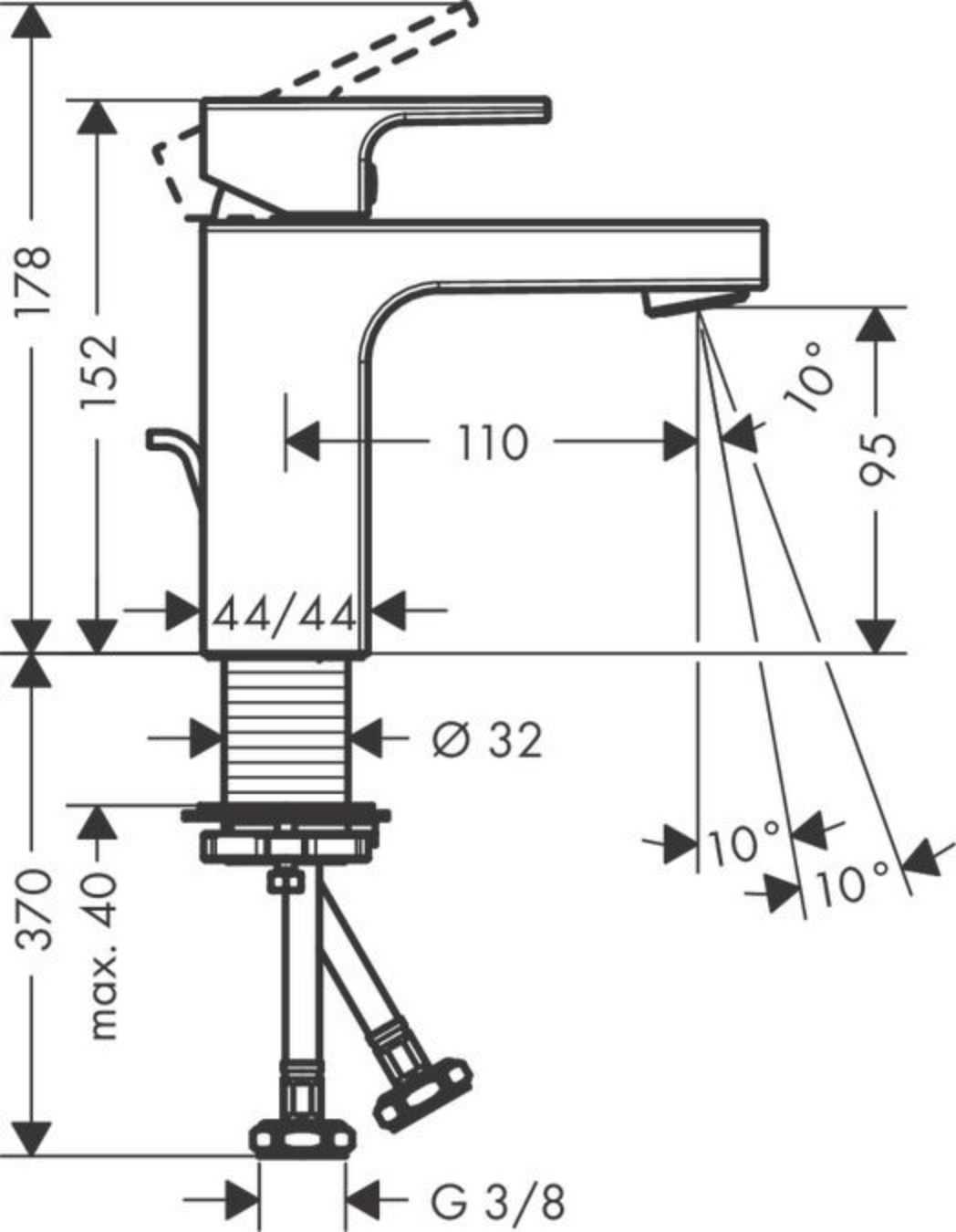
178
152
110
10°
95
44/44
Ø 32
10°
10°
370
max. 40
G 3/8