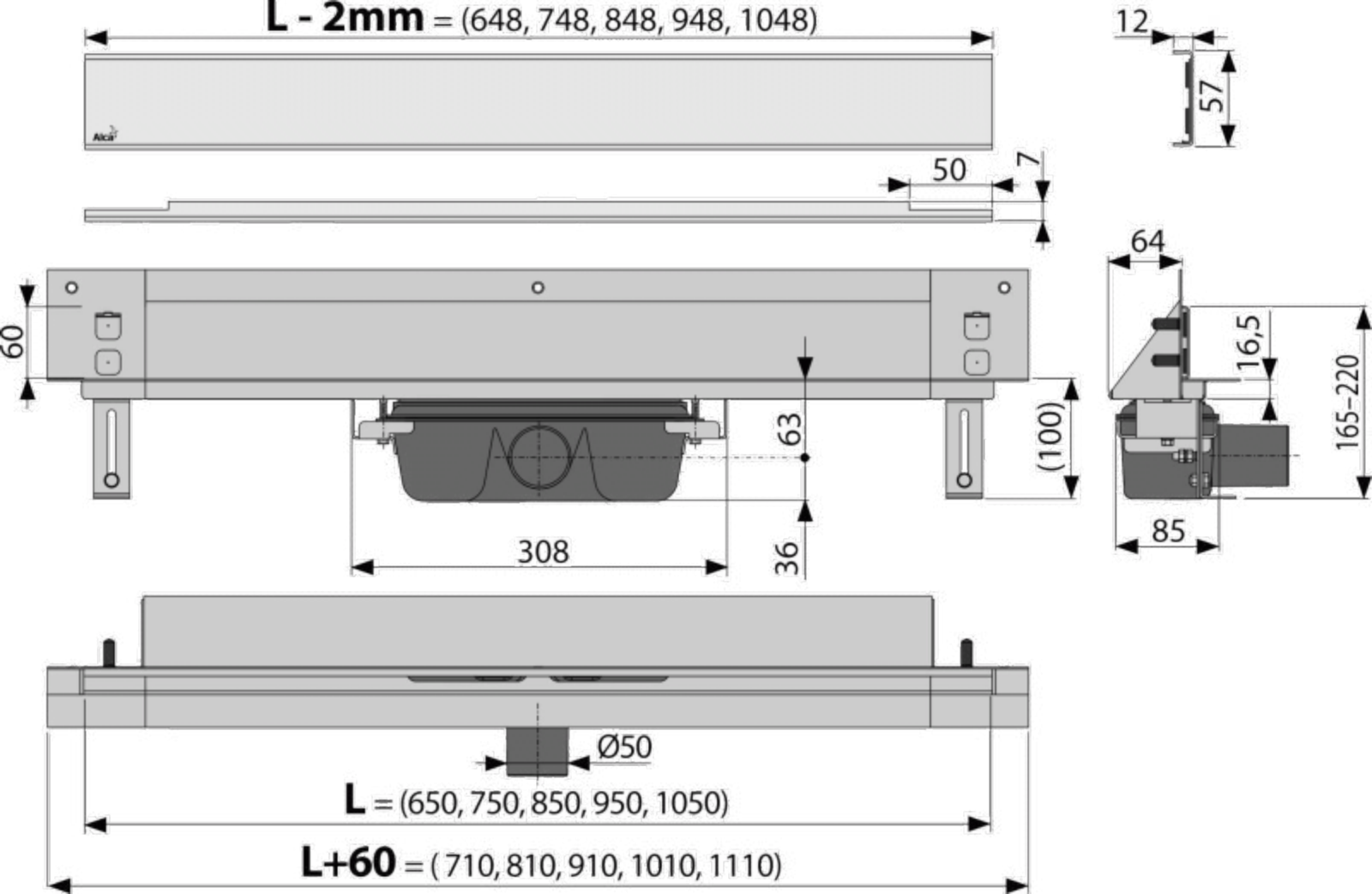
L - 2mm = (648, 748, 848, 948, 1048)
12
57
50
7
64
60
16,5
165–220
63
(100)
308
36
85
Ø50
L = (650, 750, 850, 950, 1050)
L+60 = (710, 810, 910, 1010, 1110)