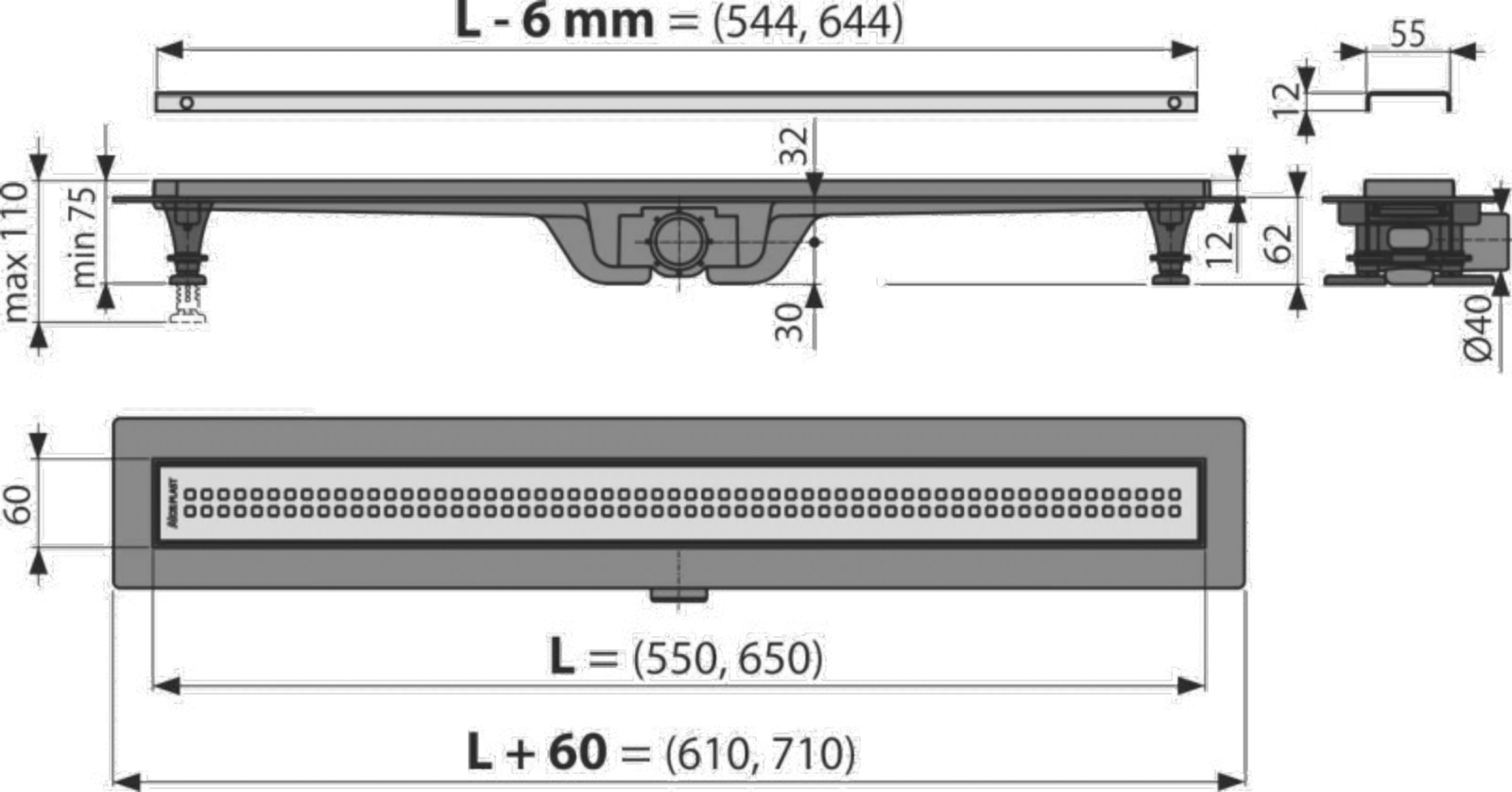
L - 6 mm = (544, 644)
55
12
32
max 110
min 75
12
62
30
Ø40
60
L = (550, 650)
L + 60 = (610, 710)