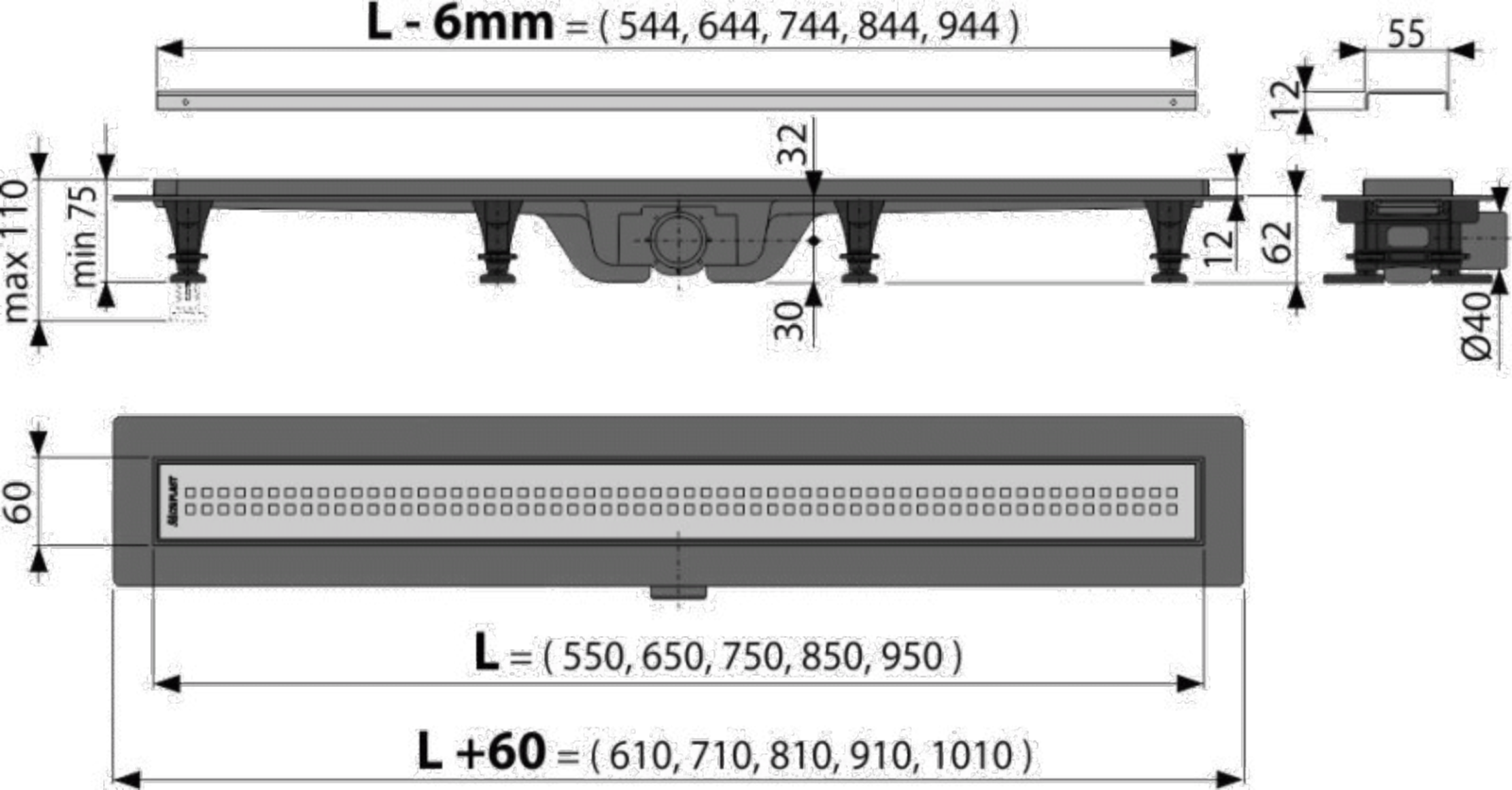
L - 6mm = (544, 644, 744, 844, 944)
55
12
32
max 110
min 75
12
62
30
Ø40
60
L = (550, 650, 750, 850, 950)
L +60 = (610, 710, 810, 910, 1010)