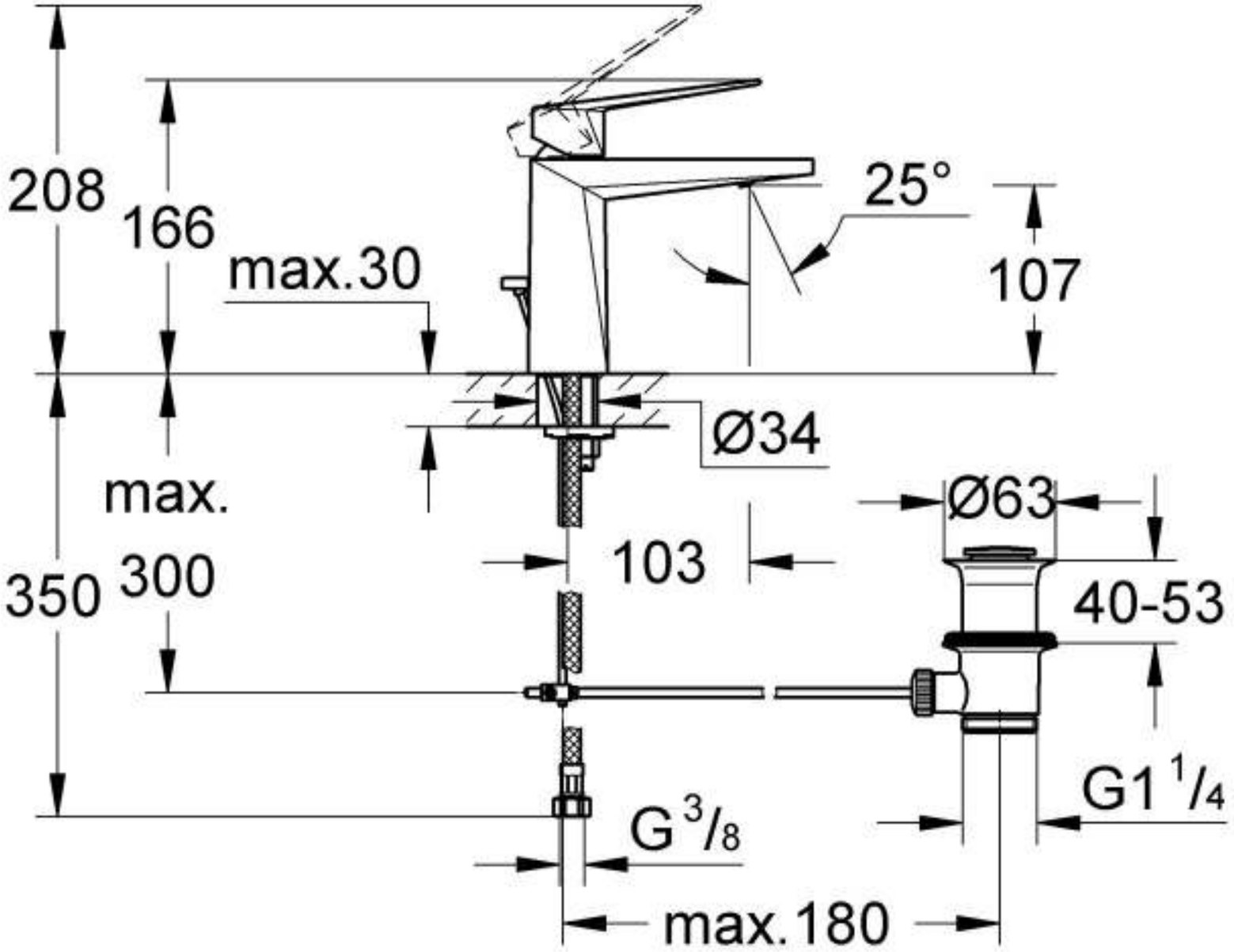
208
166
max.30
25°
107
Ø34
max.
350
300
103
Ø63
40-53
G1 1/4
G 3/8
max.180

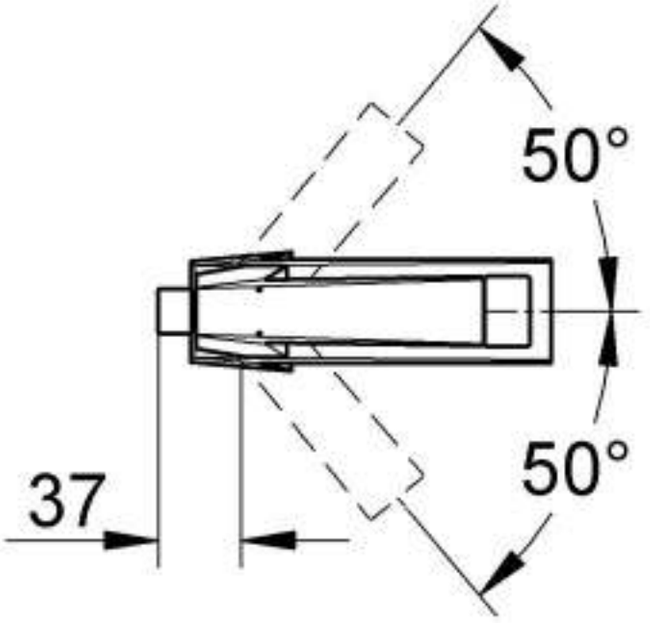
50°
50°
37