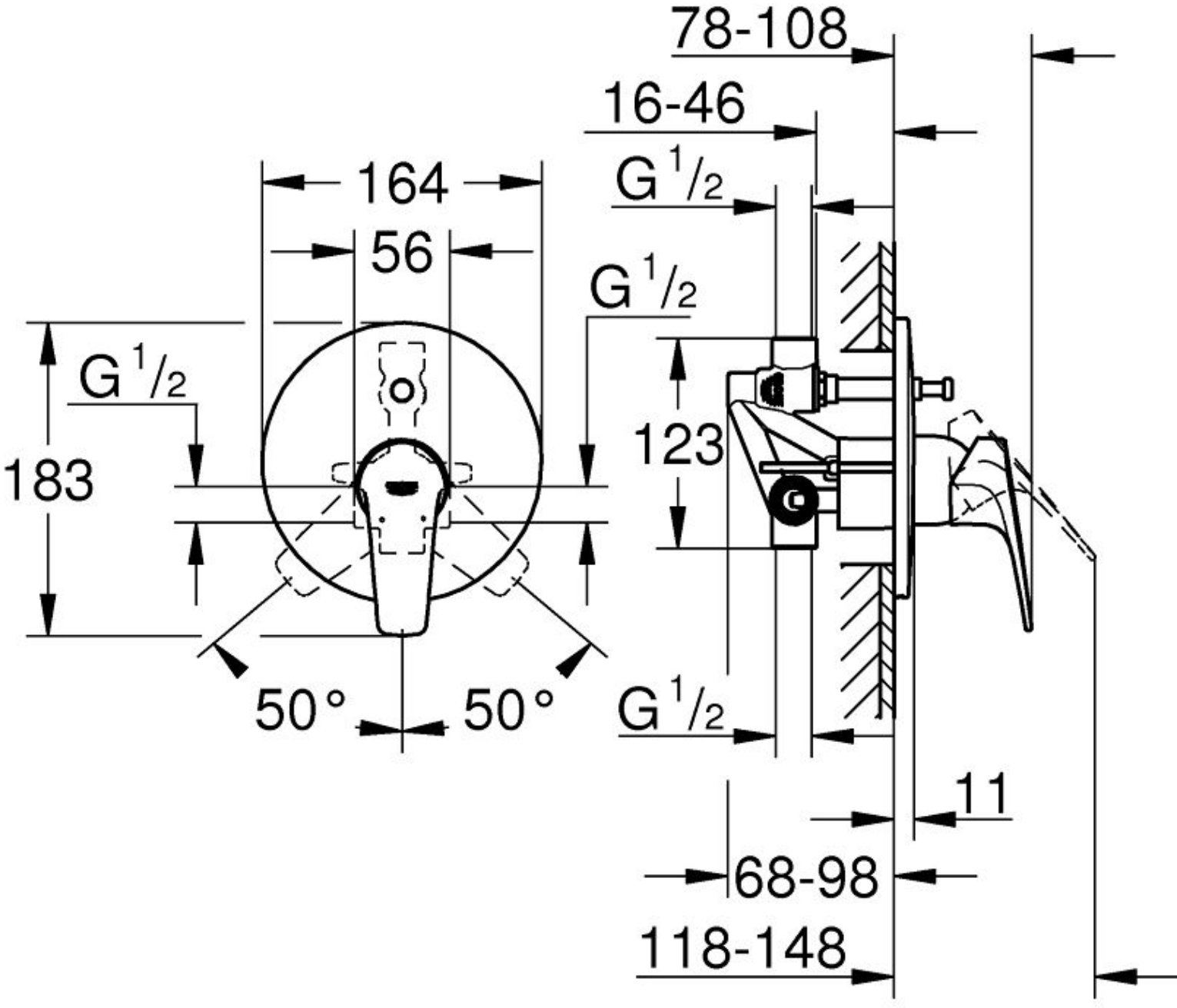
78-108
16-46
G 1/2
164
56
G 1/2
G 1/2
183
123
50°
50°
G 1/2
11
68-98
118-148