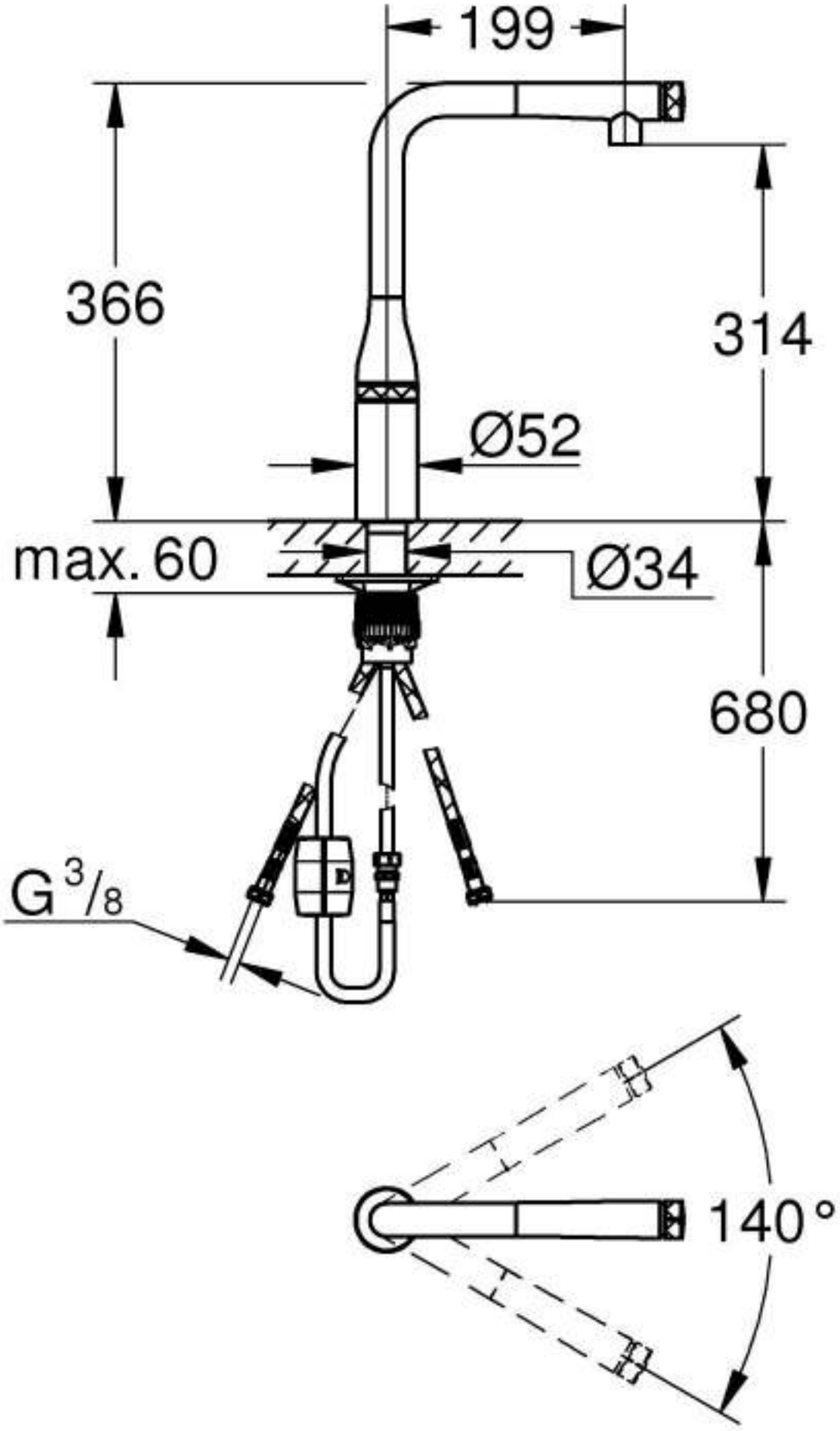
199
366
314
Ø52
max. 60
Ø34
680
G 3/8
140°