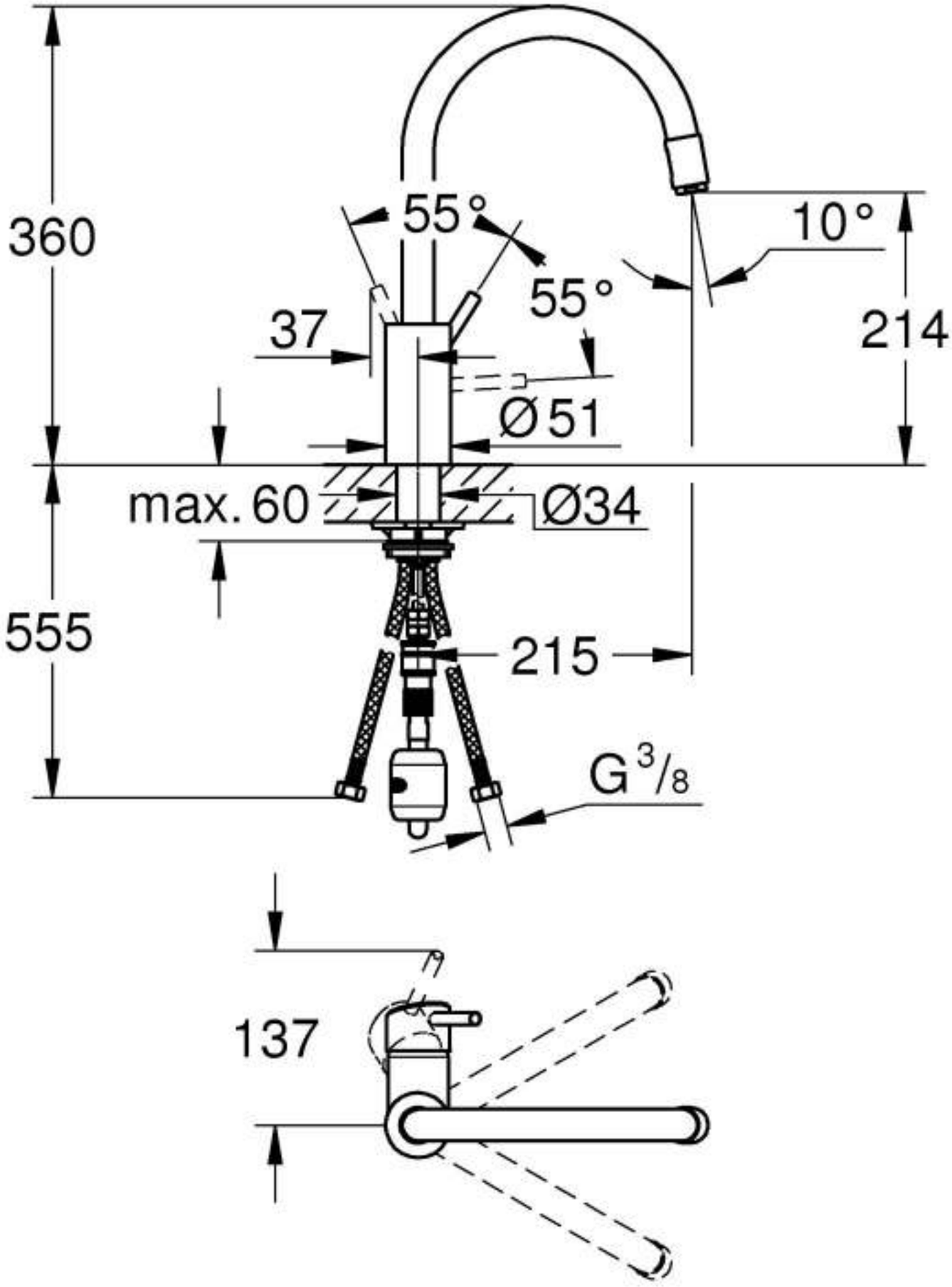
360
55°
55°
10°
37
214
Ø51
max. 60
Ø34
555
215
G 3/8
137