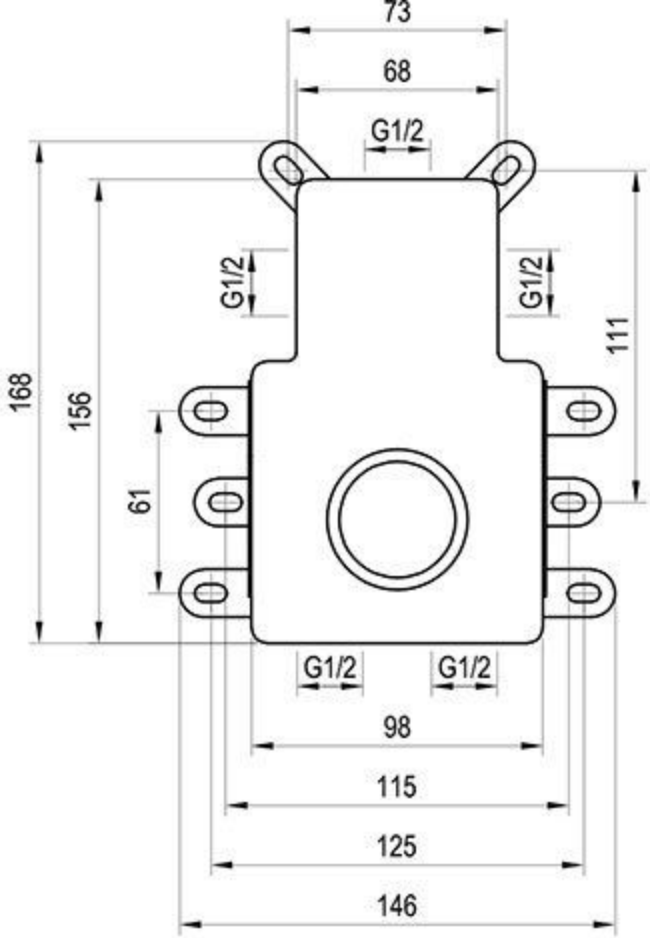
73
68
G1/2
G1/2
G1/2
111
168
156
61
G1/2
G1/2
98
115
125
146

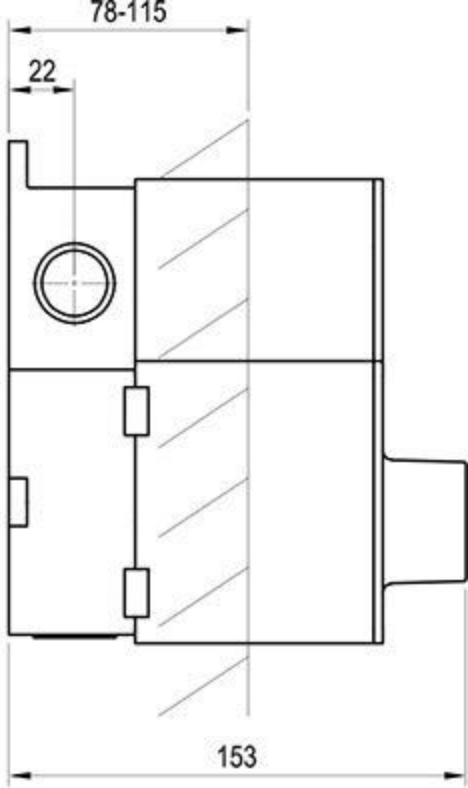
78-115
22
153

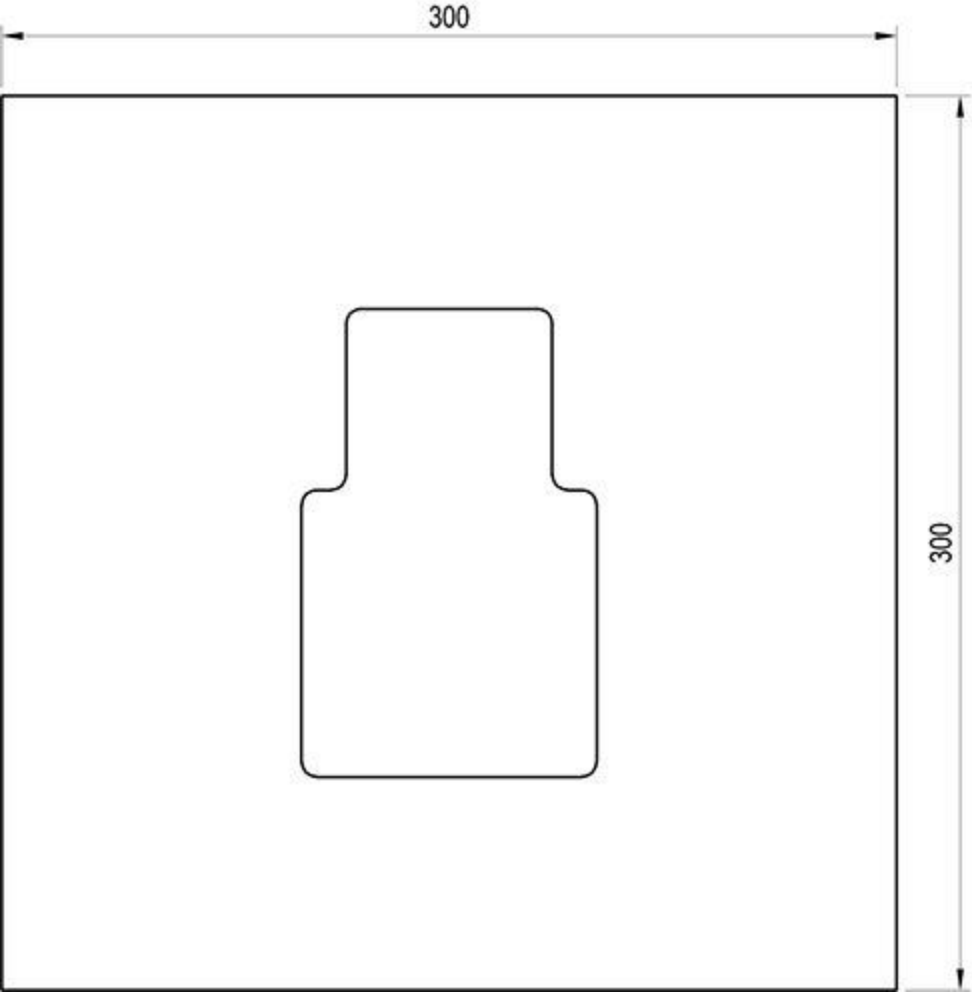
300
300