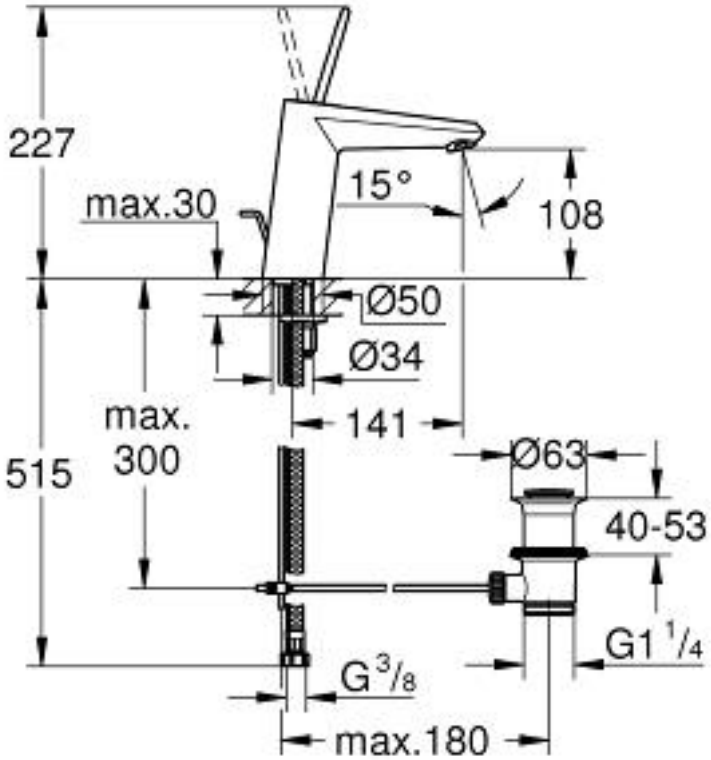
227
max.30
15°
108
Ø50
Ø34
max.
300
141
515
Ø63
40-53
G1 1/4
G 3/8
max.180

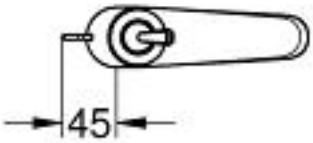
45